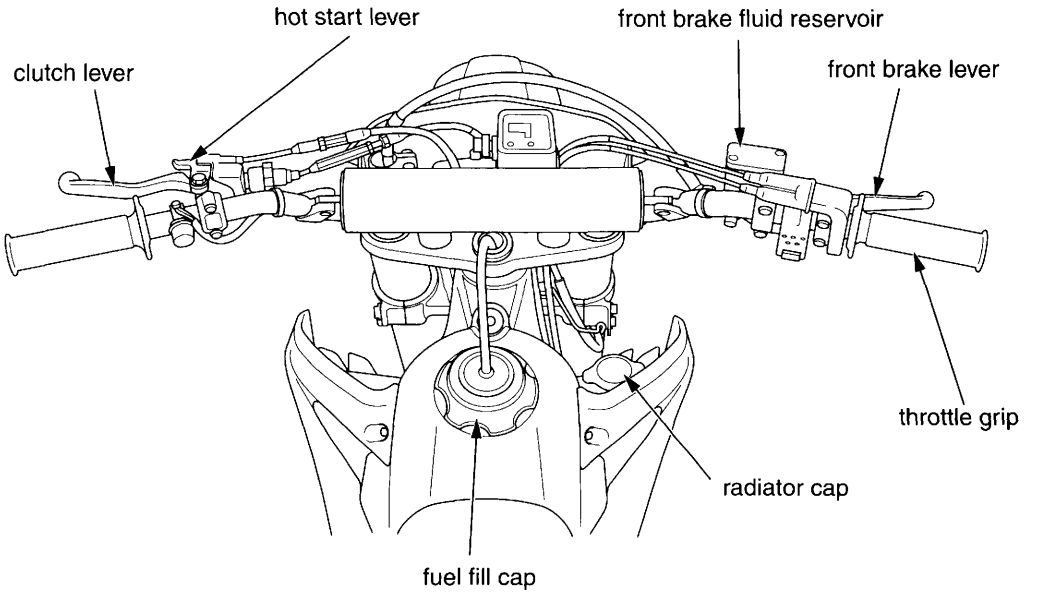
hot start lever
front brake fluid reservoir
clutch lever
front brake lever
throttle grip
radiator cap
fuel fill cap

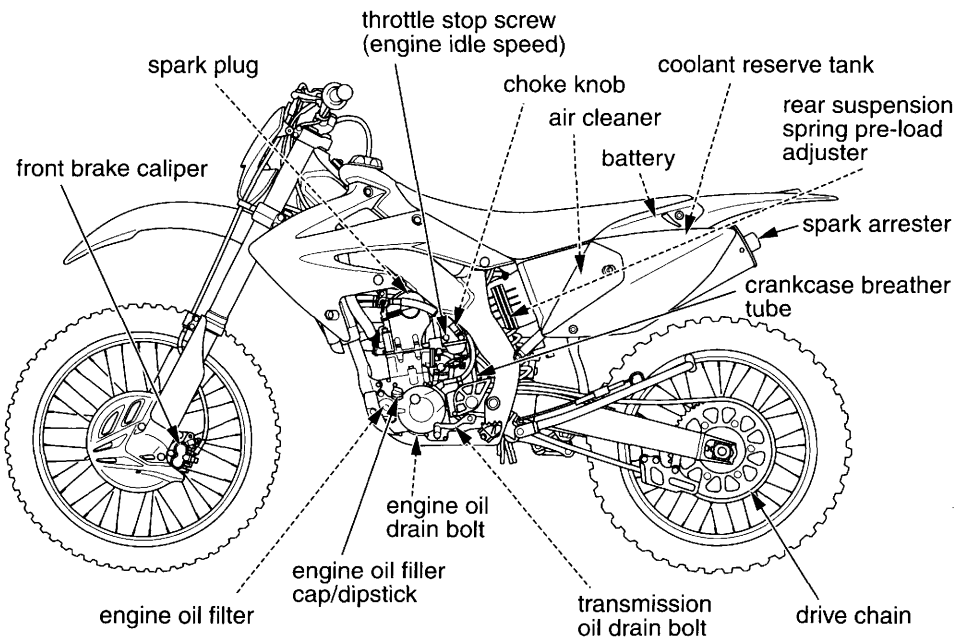
throttle stop screw
(engine idle speed)
spark plug
coolant reserve tank
choke knob
air cleaner
rear suspension
spring pre-load
adjuster
battery
front brake caliper
spark arrester
crankcase breather
tube
engine oil
drain bolt
engine oil filler
cap/dipstick
engine oil filter
transmission
oil drain bolt
drive chain

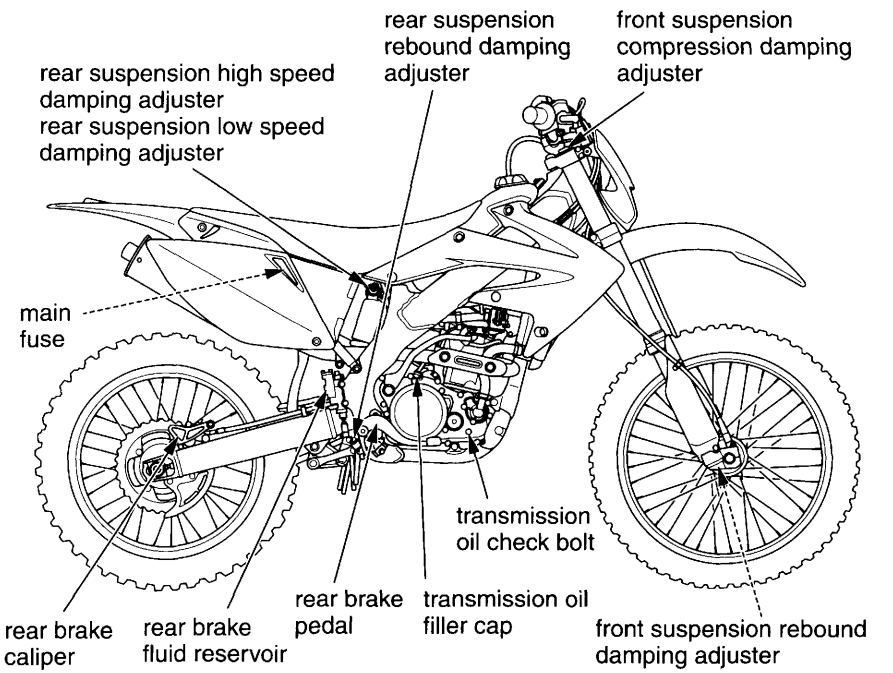
rear suspension
rebound damping
adjuster
front suspension
compression damping
adjuster
rear suspension high speed
damping adjuster
rear suspension low speed
damping adjuster
main
fuse
transmission
oil check bolt
rear brake
pedal
transmission oil
filler cap
rear brake
caliper
rear brake
fluid reservoir
front suspension rebound
damping adjuster