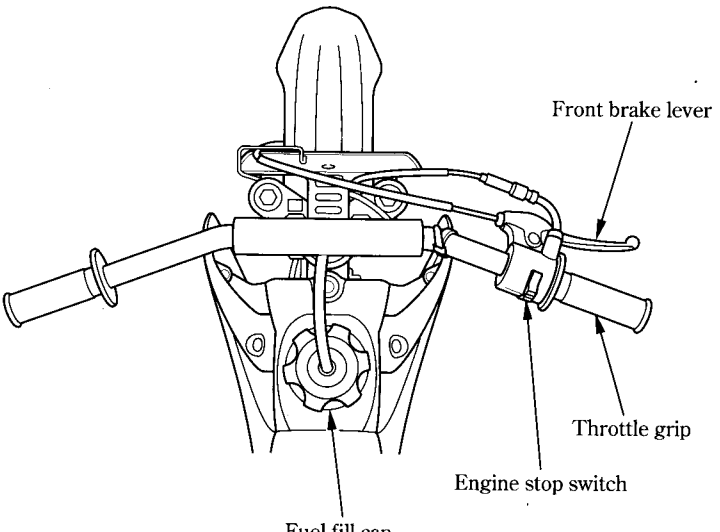# PARTS LOCATION